Executive Engineer
I.P.I.Division, Poona.
LIBRARY BOOK
No. H-131
Date Price

P. W. D. HANDBOOK

CHAPTER 26

SOIL SURVEY OF IRRIGATION COMMAND LAND DRAINAGE AND RECLAMATION

T. G. RATNAPARKHI

AND

P. M. JOSHI

पाटबंधारे प्रकल्प आणि जलसंपदा अन्वेषण मंडळ
पुणें १

1978

P. W. D. HANDBOOK

FIRST EDITION—1876

SECOND EDITION—1877

THIRD EDITION—1883

FOURTH EDITION—1887

FIFTH EDITION—1896

SIXTH EDITION—1916

SEVENTH EDITION—1922

EIGHTH EDITION—1931

NINTH EDITION—1949

TENTH EDITION
CHAPTER 26—1978

This chapter of the tenth edition is edited by the Director, Maharashtra Engineering Research Institute, Nashik 422 004, on behalf of Government of Maharashtra.

Editorial Staff :

Shri P. K. Nagarkar, Director,

Shri S. B. Sohoni, Deputy Director, and

Shri S. K. Tambe, Asstt. Research Officer.

Printed at the Government Central Press, Charni Road, Bombay 400 004

Published by the Director, Government Printing and Stationery, Bombay 400 004

PREFACE

The P. W. D. Handbook was last revised in 1949 as 9th edition which has been in vogue so far. As most of the material in this Handbook has become outmoded and considerable technological developments have taken place since then, it was decided to bring the matter up-to-date and publish in the form of a new Handbook. The work which was originally being dealt with by a separate unit headed by a special officer was subsequently entrusted to the Maharashtra Engineering Research Institute, Nashik, for co-ordination and publication. The accompanying list shows chapters of the revised edition assigned for writing to different officers in the Irrigation, Public Works & Housing and Urban Development & Public Health Departments of the State. The draft chapters are approved by a committee of Chief Engineers of the three Departments, before publication.

2. This Chapter which has been added new to the Handbook deals with the nature of the problem of water logging, salinity and their solution by drainage, the importance of the soil survey, various types of soil survey, detailed description of the soil survey procedure, system of soil classification, preparation of soil survey report for an irrigation project, fixation of X-limits to control percentage of sugarcane, annual survey of irrigated area and reclamation of problematic and/or affected portions of the command of an irrigation project.

P. R. GANDHI,
Chief Engineer (I) and Joint Secretary,
Mantralaya, Bombay 400 032.

T. G. RATNAPARKHI,
Superintending Engineer,
Warna Project Circle.

P. M. JOSHI,
Soil Survey Officer,
Irrigation Research Division.

P. W. D. HANDBOOK (REVISED)

List of Chapters

Chapter No.	Subject
1	Materials
2	Masonry
3	Reinforced concrete construction
4	Prestressed concrete
5	Plastering and pointing
6	Preparation of projects (all types), regional geology
7	Surveying
8	Excavation
9	Foundations
10	Buildings
11	Town planning
12	Roads
13	C. D. works and bridges
14	Ports and harbours
15	Runways and air-strips
16	Electrical works connected with buildings
17	Soil mechanics
18	Hydraulics
19	Hydrology and water planning
20	Masonry and concrete dams
21	Earth and composite dams
22	Instrumentation
23	Spillways, outlets, gates and hoists
24	Canals
25	Irrigation and irrigation management
26	Soil survey of irrigation command, land drainage and reclamation
27	Hydro-power schemes
28	Tunnelling
29	Urban water supply
30	Rural water supply
31	Sanitary engineering
32	Construction machinery
33	Quality control and safety measures
34	Labour laws
35	Rate analysis
36	Construction planning
37	Land acquisition
38	Mathematical data and miscellaneous information

CHAPTER 26

INDEX

		PAGE
1.	*Scope*	1
2.	*Adverse effects of impeded drainage*	1
3.	*Soil surveys of the irrigation command—*	
	3.1 Object of the soil survey	2
	3.2 Types of soil surveys and their scope	2
4.	*Procedure of Reconnaissance Survey—*	
	4.1 Object of the reconnaissance survey	3
	4.2 Expected rate of progress	3
	4.3 Soil surveying procedure	3
5.	*Procedure of Semi-detailed Soil Survey—*	
	5.1 Object of the semi-detailed survey	4
	5.2 Speed of soil survey	4
	5.3 Cost of survey	4
	5.4 Survey procedure	5
	5.5 Preparation of the base map and Division into sub-catchments.	5
	5.6 Field-work	6
	5.7 Determination of areas unsuitable for irrigation ..	13
	5.8 Climatological data	13
	5.9 Laboratory work	13
	5.10 Interpretation of Soil Survey Data	14
	5.11 Soil Survey Report	16
6.	*Fixation of* ' X ' *limits*	17
7.	*Control over Salinity, Alkalinity and Water-Logging—*	
	7.1 Annual demarcation of affected areas	18
	7.2 Preparation of Subsoil Drainage Schemes	19
	7.3 Construction of Drainage Schemes	20
	7.4 Reclamation of water-logged, saline and/or alkaline lands	20

LIST OF TABLES

TABLE No.		PAGE
1.	General classification of saline lands	19

LIST OF FIGURES

FIG.		
1.	An open profile	7
2.	Triangular chart used for textural classification	9
3.	Structural types	10
4.	Infiltration test	11

CHAPTER 26

SOIL SURVEY OF IRRIGATION COMMAND LAND DRAINAGE AND RECLAMATION

1. Scope

Irrigation often involves application of moisture in excess of the storage capacity of the soil. This excess water flows along the surface of the irrigated areas and some of it percolates into the subsoil towards the low-lying areas. If the drainage of this excess water is not taken care of, problems of water logging, salinity and alkalinity of the irrigated land arise leading to heavy loss of agricultural production. This Chapter deals with the nature of this problem and the steps that must be taken to keep it under control. Broadly speaking, these steps are as follows:—

(*a*) A soil survey of the command under irrigation project is conducted to study the nature of the soil from the view point of water logging, salinity and alkalinity. Based on this survey the cropping pattern which (along with other requirements) helps to avoid such ill-effects is suggested and areas which are more vulnerable to such problems are also demarcated.

(*b*) The soil survey of the above type is conducted at the project formulation stage. At the stage of commencement of irrigation after the completion of the project, further detailed check is applied by working out for each outlet command a limit on the area under perennials. These limits are called the "X limits" and their purpose is to avoid intensive cultivation of heavy perennials for such intensive cultivation has in the past given rise to the water logging and salinity.

(*c*) Along with these preventive measures a continuous watch is kept on the state of the soil in the command by annually demarcating the water logging, saline and alkaline areas, studying the trend of the rise and fall of groundwater, and by formulating subsoil drainage schemes as remedial measures against the damage that has actually occurred or is about to occur.

In the subsequent paragraphs the mechanism of water logging and salinization of land will first be described and steps to keep this problem in check will then be dealt with.

2. Adverse effects of impeded drainage

Water applied in the field for irrigation is quite often in excess of what the soil can store. The excess water contributes to the surface and subsoil flow. Further in the transit through the canal and its many branches, some water percolates into the underground and joins the subsoil flow.

If the subsoil flow does not get an effective outlet, there is an unchecked rise of the groundwater level with the following adverse effects :—

(*a*) *Water logging.*—Plant roots absorb, along with water and nutrients, certain amount of oxygen from the air in the soil space and exhale carbon dioxide as the waste product of respiration. Proper aeration of the soil is thus necessary for free respiration and good plant growth.

When the groundwater is one metre or less below the ground level, the condition is technically defined as the High Groundwater Condition. In this case, although the soil is not flooded, soil pores are to a large extent blocked by capillary rise of water and the respiration of the plant roots is impeded.

When the groundwater comes at or above the ground level, the field is turned into a swamp. Such soil is said to be water-logged, and it supports nothing except the water-loving wild plants like the bulrushes.

(*b*) *Salinity.*—Salts are always present in the soil. Due to subsoil flow, salts dissolved in water are moved laterally to the low-lying areas and the saline water rises vertically under capillary.

Tb 4083—3 (13,136—3-80)

Due to evaporation, water is expelled and the salt is left behind. The root zone of the soil is thus charged with successively higher concentration of salt. In this way the soil becomes saline. Salinity reduces the ability of the plant to absorb water. The adverse effect of salinity is gradual, there is increasing yield-reduction as the salt concentration increases, and at a certain level, even the germination is not possible.

Salinity can be improved by " leaching ", that is by irrigation combined with good subsoil drainage. Crops, while suffering from reduced yields actually absorb certain amount of salt and improve the soil.

(*c*) *Alkalinity.*—In a saline soil, salt is a physical admixture with the soil particle. In an alkaline soil, the sodium and magnesium from the salts combine chemically with the soil particles.

Soil alkalinity is toxic to the plant. In a normal soil, soil particles are flocked together into crumbs of about 1 mm size. In alkaline soil, the " tilth " is lost, that is, these crumbs are broken down, and the soil is thrown into a " dispersed state ". The soil then suffers from poor aeration. When dry, the alkaline soil changes into a " hard pan " which is a dense slab, difficult for plant roots to penetrate.

Alkaline soils have a pH value more than 9. They cannot be cured by only drainage and leaching. By chemical treatment it is necessary to take the sodium and magnesium out from the soil complex and turn them into free soluble salts. Alkaline soil is thus first made saline and then leached out. The tilth is restored by agronomic treatment.

3. Soil surveys of the irrigation command

3.1. *Object of the soil survey.*—The soil surveys are designed primarily to assess the subsoil drainage characteristics, salinity, and alkalinity of the soils and their suitability for irrigation with special reference to perennials. Along with the soil survey the data on other technical and economic features is also gathered. Thus the term " Soil survey " is not used in a restrictive sense : the main object is the study of soils but simultaneously other features relevant to the use of the land and water potential and within the limits of funds and personnel are also studied.

3.2. *Types of soil surveys and their scope.*—Depending on the degreee of details to be brought out in the investigations of soils, soil survey is classified into three types:—

3.2. (A) Reconnaissance Survey.

3.2. (B) Semi-detailed Survey.

3.2. (C) Detailed Survey.

The features to be investigated in the above surveys may be outlined as follows:

3.2. (*A*) *Reconnaissance Survey.*—The reconnaissance survey is a precursor to a semi-detailed survey. This survey is also done when a general idea of a large area is required without spending much time and money on the survey. It involves the study of topo sheets which are drawn to a scale of 1 : 63,360. The topo sheet study gives the general nature of the land slopes, land configuration, surface drainage etc. These broad impressions are to be supplemented by the visual inspection of topography, general landscapes, pattern of classification and general nature of the soils. The soil depth and profile characteristics need to be determined at a few places preferably by means of open profile.

3.2. (*B*) *Semi-detailed Survey.*—This is carried out with the help of maps drawn to a scale of 1 : 31,000 approximately. The pre-irrigation soil survey whose procedure has been described in detail below is a semi-detailed survey. This survey is sufficient to give data for a proper formulation of the crop pattern at the stages of project preparation. It also gives data necessary to work out the overall percentage of perennial crops whose demand for water is rather heavy. The areas where water-logging, salinity, and alkalinity may occur at the earliest stages of irrigation are also demarcated in semi-detailed survey, the general irrigability classification of the soils in the project command is given.

3.2. (*C*) *Detailed Survey.*—Detailed survey is done with the help of village maps drawn to a scale of 1 : 7990 approximately. They are used for determination of 'X' limits (the percentage of sugarcane and heavy perennials to be allowed) under the command of each irrigation outlet of the project. This survey is necessary prior to the actual operation of the irrigation system for perennial crops like sugarcane.

Procedure of the soil surveys of the various types will now be given in the following paragraphs.

4. Procedure of reconnaissance survey

4.1. *Object of the Reconnaissance Survey.*—As detailed soil surveys are time-consuming and hence costly, a quicker and more generalised method for soil classification is by reconnaissance soil survey in which only a part of the soil boundaries is actually verified, in contrast to a detailed survey wherein all soil boundaries are sketched in from observations on the ground. Reconnaissance surveys depends on a large amount of estimation and secondary evidence.

4.2. *Expected Rate of Progress.*—The rate of progress in a reconnaissance survey may vary from 250-400 hectares per day per field party of four persons in undulating and plain areas respectively according to the case of movement. This is nearly five times the rate of standard semi-detailed survey.

4.3. *Soil Surveying Procedure.*—Such reconnaissance survey precede the semi-detailed survey explained in paragraph 2.2(*a*). The procedure of the reconnaissance survey is as follows:—

(*i*) The start of the reconnaissance begins with the study of topo sheets which are normally drawn to a scale of 1 : 63,360 i.e. 1″=1 mile. From these studies by inspecting the contours and the land slopes the terrain should be divided into the following land forms:—

(*a*) Uplands are the upper portions of the hills and the plateaus lying on the hill tops. Normally these areas are characterised by thin soil mantle or exposed rock.

(*b*) Midlands are the undulating portion on the hill slopes. Here also although these may be within the commanded area the land slopes are generally very steep and the soil mantle is thin. The investigation in this area to be carried out is whether there is any possibility of irrigating these area by terracing and/or contour bunding.

(*c*) Then we come to the lowlands which are most important from the point of view of irrigation, and finally, to the flood plains on the banks of the rivers. The lowlands covered with *insitu* soil need investigation by means of a number of open profiles. The soil depth, texture, structure, water-intake rates should be observed.

Generally, the alluvial deposits near the river and stream are fertile. One of the features of the streams in Maharashtra is that even minor streams have a disproportionately large flood banks laden with alluvial deposits. The drawback

of these lands is that the soil is very pervious, probably low in fertility and in most cases heavily cut-up because of small streams joining the main nalla. Nevertheless survey of this portion is also important, as such lands could be mechanically shaped and improved for irrigation.

(*ii*) After this division of the terrain into four basic categories, the next step is to choose small areas for semi-detailed survey. Normally the areas for semi-detailed surveys should be so selected that they are representative and their extent should be such that the survey should be over in the time stipulated for the reconnaissance survey. It is sufficient to take a sample area in the lowlands in the flood plains. It should be sufficient if 5 percent area is taken as a sample area.

(*iii*) On these sample areas, a semi-detailed survey should be carried out following the procedure given in paragraph No. 4. This semi-detailed survey consist in taking a number of auger holes and number of open profiles. It is a desirable change to omit some auger holes and replace them by a few or number of open profiles.

(*iv*) After the survey of the above type is done, a report should be prepared to present the following features.

Total area which is suitable for irrigation, and the area which lies outside the command and the area that is unsuitable for irrigation should be shown on a plan. On the area which is suitable, a broad division of soils into shallow, medium and deep soils should be indicated. These terms are defined in para. 4.4 (*a*). Assuming that shallow soils will not support any perennial irrigation, the possible percentage of perennials should be indicated.

If the survey indicates that a certain part of the command has very flat land slopes, these areas should be investigated to see if any evidence of salinity and alkalinity is present. If such evidence e.g. surface salt-crusts, water-loving vegetation, barren lands, etc. comes forth, the area should be reported as a spot vulnerable to water-logging and salinity with the advent of irrigation.

Reconnaissance is usually planned to discover and outline soil areas suitable for more intensive development. It makes possible better appraisals of the soils in a detailed survey, and rapid evaluation of areas where development cannot await completion of detailed or semi-detailed survey.

5. **Procedure of semi-detailed soil survey**

5.1. *Object of the semi-detailed survey.*—The object of the survey is to obtain sufficient data on soil, topography, subsoil drainage, etc. so that—

(*a*) it is possible to formulate a workable cropping pattern at the project-preparation stage.

(*b*) it should be possible to broadly classify areas according to their suitability for irrigation, particularly of perennials.

(*c*) the problematic saline and alkali soil areas and high groundwater patches can be located.

5.2. *Speed of soil survey.*—One sub-division with one Deputy Soil Surveyor, one Junior Engineer, two Soil Classifiers and other field staff such as two Senior Survey Assistants, four Junior Survey Assistants, four Augar Operators with sufficient number of labourers should be able to complete 250 square kilometres per working season of eight months from October to May.

5.3. *Cost of survey.*—The items covered in the survey generally consist of taking auger bores, collecting samples, digging open profiles and carrying out their inspection nalla survey, observation of well waters, maintaining photographic and other records, collecting agronomic and climatological data, compiling, mapping and reporting

the data collected in surveys etc. The survey with these items costs Rs. 50 per square kilometre. This rate however includes only labour and other charges and does not account for other establishment mentioned in para. 5·2. Inclusive of this expenditure, the cost of survey does not exceed Rs. 4 per hectare.

5.4. *Survey procedure.*—Surveying procedure consists in getting the soil data from surface inspections, auger holes, open profiles, groundwater level, and data on quality of water from well observation. The soil data from surface observations and open profiles is supplemented by a number of auger holes, conventionally called " auger pits ". The object of the survey ultimately is as follows :—

(*a*) Classification of soils into shallow, medium and deep soils defined as follows:

Shallow soil	..	The area with soil cover from 0 to 40 cm.
Medium soil	..	The areas with soil cover more than 40 cm. but up to 250 cm.
Deep soil ..	..	The areas with soil cover more than 250 cm.

This is the presently adopted classification and its revision is under study.

(*b*) Delineation of areas which are unsuitable for irrigation, being cut up, saline, alkaline, without soil mantle or with a very thin soil mantle, with excessive slopes etc.

(*c*) Data on slopes, infiltration capacity of the soil, soil texture, and soli structure which is of use in designing the irrigation schedule for each of the suitable (i.e. shallow, medium and deep) soils, and

(*d*) Data on surface and subsoil drainage, location of saline and alkali patcher and all the features relevant to subsoil drainage.

To achieve these objectives, the soil survey procedure has been devised as follows :

5.5. (*A*) *Preparation of the base map.*—It was the practice so far to show the project command on a map drawn to scale of 1 : 31,680 (2″ = 1 mile) prepared from village maps available in 1 : 7990 (or 1″=660 ft.) scale. After metrication, it will be necessary change these scales to 1 : 30,000 (twice of 1 : 15,000 maps supplied for many projects by G.S.I.) and 1 : 5000 respectively. On this map the following features are shown:—

(*a*) the dam,
(*b*) the river,
(*c*) major and minor nallas,
(*d*) tentative canal alignment,
(*e*) roads and villages,
(*f*) conspicuous objects for field identification,
(*g*) each survey number in the command, and
(*h*) wells shown in the village maps.

Wells not shown in the village maps are added subsequently.

5.5. (*B*) *Division into sub-catchments.*—The project command is divided into various sub-catchments, each bounded by canal on one side, river on the other, and two ridges along which two distributories would be aligned. Each sub-catchment is drained by a nalla and its branches and can be regarded as an independent drainage unit.

With this preliminaries, the field-work begins.

5.6. *Field-work.*

5.6. (*A*) *Laying the base line and the grid.*—A base line approximately parallel to river is laid. At right angles to it, cross section lines are laid 400 metres apart, with grid points spaced 400 metres. These points are numbered serially, starting from the canal. Every grid point is thus identified as follows:—

Village	Survey Number
Cross-section number	Pit No.

At each grid point, an auger bore is to be taken to find out the depth of soil. This auger bore has been traditionally called as the "Auger Pit"—a misnomer to some extent. The term is currently in use to denote an auger bore.

5.6. (*B*) *Auger pit work*—(*i*) *Location of auger pits.*—At each grid point, an auger hole is taken by means of a 1·3 metre long, 10 cm. diameter auger. The auger can be extended by using extension rods each 1 metre long.

Augering is to continue for a depth of 2·50 metres or up to occurrence of a hard strata, whichever is earlier.

Samples of soil are collected at the following depths:—

Sample No.	Depth (cm)	Sample No.	Depth (cm)
1	0–20	5	120–160
2	20–40	6	160–200
3	40–80	7	200–250
4	80–120		

(*ii*) *Change in auger pit location and replacing an auger pit by an open profile.*—The intervals at which the auger holes are to be taken have been given as above only for general guidance. With due regard to the type of topography, the soil surveryor is expected to alter the gride-spacing and the grid-location to obtain the maximum information with the given limitations on the manpower and funds available for the survey. For instance, if there is a large forest area which is not to be irrigated, there is no need to take auger pits in this area. Similarly in a area whose nature is obvious to the eye, efforts need not be wasted by taking a large number of auger holes. On the other hand, where the soil is suitable for cultivation, the number of auger holes may be increased and, in fact, a few auger holes may be replaced by open profiles to obtain more information.

In the same way the depth interval at which samples are to be taken has been specified as above only in a general manner. While obtaining these samples if an abrupt change is seen it will perhaps be necessary to obtain more samples to investigate the feature in greater detail. If the auger bores show indications of alkali hard pans which is almost jointless and very tight, the auger hole may have to be replaced by a open profile.

In this way the procedure of soil survey should not be implemented mechanically but the officer in-charge of the survey should be continuously watchful and change the procedure to avoid wasteful repetition on one hand and absence of information on the factors of interest on the other.

(*iii*) *Field observations on auger pits.*—As the samples are taken out from the auger hole, they are arranged in a clockwise fashion around the hole.

In the " Pit Book " the surveyor records his observation on each sample, and he also records the type of underlying stratum.

Following observations are recorded :—

(*a*) Location of the A. P. (Auger Pit).
(*b*) Crops in the survey number.
(*c*) Colour of the soil according to standard chart.
(*d*) Texture, by feel.
(*e*) Soil structure.
(*f*) Presence of lime kunker in by testing with 10 percent Hydrocloric acid. Intensity of effervescence is indicated as e=slight, as=strong, ev=violent.
(*g*) Mention is made whether the samples are collected for laboratory tests or not.

5.6. (*C*) *Collection of soil samples.*—Soil samples are collected at the rate of one for each depth mentioned in the para. 5.6 (B) from every fourth bore on the alternate cross section. The samples from three consecutive auger-bores close to the river on alternate cross section are also collected. The soil from each layer is mixed thoroughly taking care that the extraneous material from the ground or from other layer is not mixed up with it, and the sample is representative of the layer from which it is taken. One kilogram soil for each representative samples is collected in a cloth bag of size 20 cm. × 30 cm. The location of the sample such as village, survey number, cross section number, and pit number and the depth must invariably be given on a label and kept with the sample. The same information is also written on the bag. Proper labelling is very important so that the identity of sample is not lost. The bags containing samples from the same pit are tied together to facilitate the sorting work and are transported to laboratory for testing as soon as possible.

5.6. (*D*) *Inspection of open profiles.*—One open profile is studied for every 10 sq. kilometres, size of the pit for this purpose is 250 cm. × 130 cm. × 250 cm. as shown in Fig. 1.

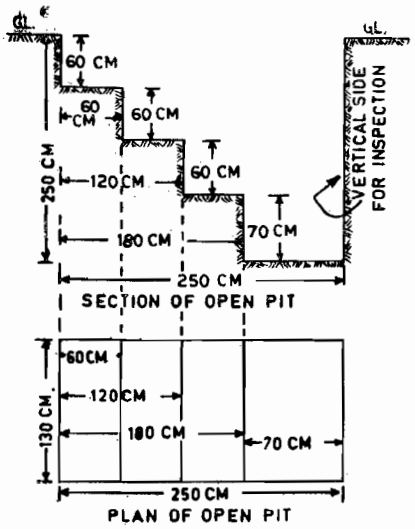

FIG.1

AN OPEN PROFILE.

Observations taken in this study are—

(1) soil horizons, and
(2) their transition,
(3) soil colour as per standard colour chart,
(4) texture by feel method,
(5) structure,
(6) mottling,
(7) consistence when wet, moist, and dry (such as sticky, plastic, brittle, friable, firm etc.),
(8) existence of concretions (lime, iron, and silicons),
(9) root distribution in the profile (depth up to which the roots go, their abundance, etc.) is recorded.

Samples are taken at various depths [*vide* para. 5.6. (B) (*i*)] for laboratory tests [normally one from each soil horizon defined as per (1) above].

During the above observations it is necessary to watch for the following factors:—

(*a*) The transition between various soil horizons should be studied carefully to see whether they are well defined or diffuse, abrupt or gradual, straight or wavy and so on. In conformities, if any, are to be watched specially. Thus the presence of sand lenses over the '*insitu*', decomposed material is an inconformity which indicates that the over lying material is alluvial or deposited after transportation.

Location of profiles with high alkalinity is of considerable importance. The alkali profile is characterised by absence of joints, low permeability, compactness and absence of roots. The standard nomenclature of soil horizons is given in figure.

(*b*) The soil colours should be observed with the help of a standard colour chart i.e. Munsell's colour chart. The colour should possibly be noted for the soil in dry as well as wet condition.

(*c*) The texture should be determined according to the system shown into the triangular chart used by USDA (Fig. 2). The standard symbols to be used in classification have been enlisted as follows:—

Textural class	Symbol
Sand	S
Loamy sand	ls
Sandy loam	sl
Loam	l
Clay loam	Cl
Sandy clay loam	scl.
silt	si
Silty loam	sil
Silty clay	sic
Silty clay loam	sicl
Sandy clay	sc
Clay	c

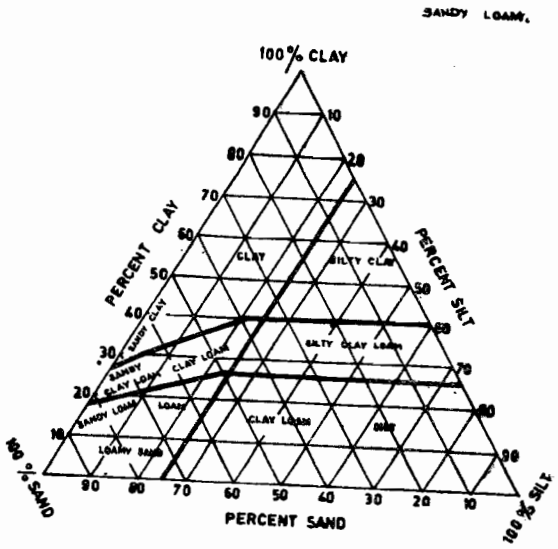

FIG. 2. TRANGULAR CHART USED FOR TEXTURAL CLASSIFICATION

The determination of the texture correctly in the field is a skillful job and experience is necessary to learn the technique. However the following guiding procedure has been given, following which each surveyor can make a start with field classification. If the field classification so obtained is compared frequently with the laboratory classification, its reliability will increase with experience. The general procedure is as follows:

The texture of the soil is determined in the field by moistening a small quantity of soil and rubbing it between fingers. When the soil is tested in this way, the behaviour for various textural classes is as follows:—

Clay.—It is a fine textured soil that usually forms very hard lumps or clods when dry. It is quite plastic and sticky in moist condition and can be rolled into flexible thread, which can be bent into a ring.

Clay loam.—It is also fine textured soil which usually breaks into clods or lumps that are hard, when dry. When moist, soil when pinched by fingers, will form ribbon. It is plastic and sticky and can be rolled into thread when moist. But this thread will not bend into a ring without breaking.

Silt loam.—A silt loam is a soil having a moderate amount of sand and only a small amount of clay. It may appear cloddy but lumps can be easily broken and when pulverised, its feel is soft and floury. When moist and squeezed between thumb and finger it will form thread which has a broken appearance.

Loam.—The loam possesses relatively even proportion of different grades of sand, silt and clay. It is mellow with some what gritty feel yet fairly smooth and alightly plastic. Squeezed when dry, it will form a cast that will bear careful handling, while the cast formed by squeezing the moist soil can be handled quite freely without breaking.

Sandy loam.—It contains excess of sand but has enough silt and clay to make it some what coherent. The individual sand grains can readily be seen and felt. It will form a cast if squeezed but will easily fall apart. If squeezed when moist a cast can be formed without breaking on careful handling. It is slightly plastic and does not form threads.

Loamy sand.—It has equal proportion of sand and clay particles uniformly mixed. In dry state it crumbles and can be rubbed out. In wet condition it is non-plastic and cannot be rolled in threads.

Sand.—Sand is loose and single grained. Individual grains can be readily seen or felt. It is non-plastic.

(*d*) The structure of the soil should be observed to see if it is prominent or otherwise. It should be classified according to the standard structural types as shown below (Fig. 3).

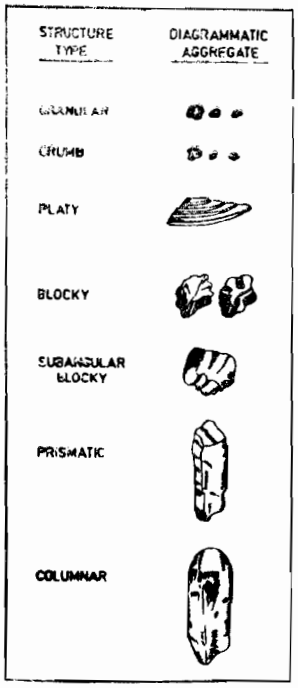

FIG. 3
STRUCTURAL TYPES

5.6. (*E*) *Infiltration Tests.*—At a representative open profile, the infiltration tests are conducted at surface, at mid depth (120 cm) and at 250 cm. An iron trough 30 cm × 30 cm × 30 cm is installed in the soil, 10 cm deep in the ground and infiltration rate is measured, after every 30 minutes and the steady rate of infiltration is obtained. The following procedure is to be followed :

The following articles and materials are required for this test:—

(1) Infiltration trough and pointer.
(2) Measuring cylinders 1 litre and 500 millilitres capacity.
(3) A Watch for recording time.
(4) Buckets, pots for pouring water etc.

30 cm × 30 cm × 30 cm iron trough is embedded in the ground about 10 cm. deep taking care that water poured inside does not leak out from the sides. A pointer to mark the constant level of water is placed across the trough and water is filled in till it just touches the pointer. The tip of the pointer is made hydrophobic i.e. moisture-resistant by applying oily substance or wax. After a fixed time interval which is normally half an hour, measured quantity of water is added into the trough till the initial constant level is reached. This quantity indicates the water infiltrated in the given interval.

The rate is calculated by the formula:—

$$\text{Rate of infiltration} = \frac{Q}{At}$$

When Q=Quantity of water added in ml.
A=Area trough which water percolates in square cm.
t=time interval in minutes.

The graph of the rate of infiltration against time is plotted. The curve has a steep slope initially, and it becomes almost horizontal afterwards indicating that the steady state has reached. This horizontal portion is produced back to meet '×' axis. The intersection of the two gives constant rate of infiltration. (Fig. 4).

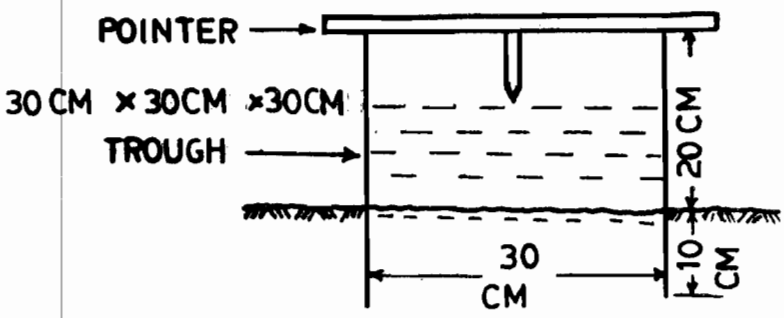

SECTIONS

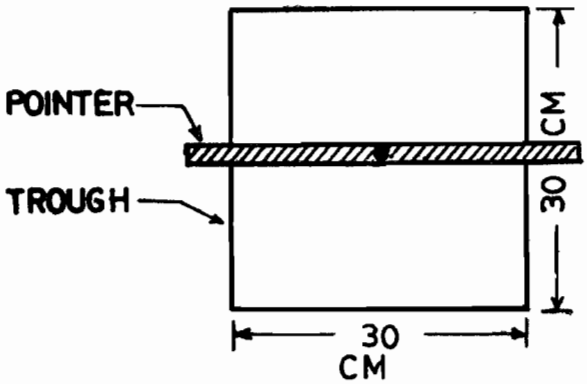

PLAN

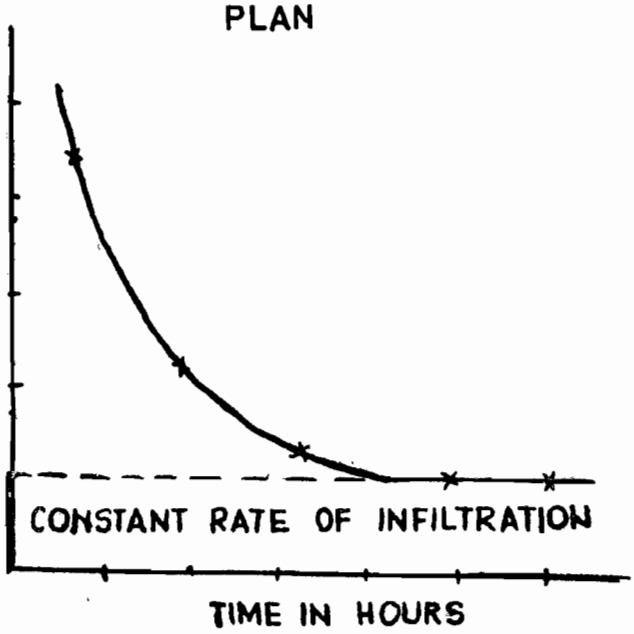

FIG. 4.

INFILTRATION TEST.

5.6. (*F*) *Observation on wells.*—Initially observations are taken for all wells in the command. Subsequent observations are taken periodically on selected wells. On these wells in the command, observations of water levels are taken in April/May and October/November. These wells are located on X sections spaced 3 to 4 km. apart. Recuperation tests are also carried out on about 10 percent of the wells. Well water samples are taken to measure EC and pH for each well.

The significance of the observation on wells is as follows :

Rainfall in most of the areas in Maharashtra, excluding Konkan is 750 mm. or less. In Vidarbha, in certain areas it is 1500 mm. and in Konkan it is still high. After the start of irrigation about 200 cm.to 250 cm. of irrigation water is applied to the areas of perennial irrigation and in the areas which receive water in Kharif and Rabi, the designed depth or irrigation is about 75 cm. At times, the actual irrigation may be more. Thus in the process of irrigation, a much larger quantity of water is applied to the command area than the one to which old topography and soil profiles are adjusted.

Under these circumstances if certain areas show high water level in the wells i.e. if the water levels in the wells is less than 3 m. below the ground, the area is already a high ground water area and with the advent of irrigation it is likely to get water-logged unless remedial measures are adopted. This feature is brought out by the observations on wells.

Another important observation is the quality of water. In the conjunctive use of ground water and canal water, this quality plays an important part. There are locations where the well water is rather saline and not quite suitable for irrigation. When the flow irrigation starts, due to percolation from the sub-soil the quality of this water is likely to improve. Both these features need to be considered in the conjunctive use of well water and ground water.

The observations of the well would become misleading if the following rules are not followed:—

(*i*) When a large number of wells is being observed, the levels should be observed in the same month—say October/November for post-monsoon, and April/May for pre-monsoon observation.

(*ii*) If the well is in use for irrigation, the levels should not be observed just after the lowering of water due to pumping out. It should be at its normal level, or suitably corrected for depletion resulting from pumping out.

(*iii*) Point with reference to which the levels are observed should be laid carefully on the well parapet. Its sketch with dimensions should be entered in a register to ensure that the same reference point is used in subsequent observations.

5.6. (*G*) *Nallas and River.*—Nalla survey is done by taking levels at every 250 m. and cross section at every 1000 m. strata on the banks and rock out crops as noticed during this survey are noted down.

Samples of river water are collected in hot weather, kharif, and rabi to find EC, pH and for detailed chemical analysis.

Two important features to be observed on nallas and rivers are as follows:—

(1) The nalla is an outfall for surface and subsoil drainage. From this view point its gradient, cross section and the flow carrying capacity is to be carefully examined. Many times where the nalla joins the river, there is a a sudden drop in the bed levels. The existance of this drop inspite of heavy floods discharge from the nalla into the river indicates that some hard stratum is present in or beneath the nalla bed to prevent retrogression under heavy floods. When the nalla is regraded subsequently to facilitate better surface and sub-surface drainage to remove water logging, the experience of this barriers at the mouth of the nalla needs careful attention.

(2) It is a common observation that in Maharashtra on both or one side of the nalla there is a thick deposit of alluvium. This deposit is disproportionately large compared to the present carrying capacities of the soils. It is at a much higher elevation also. Generally this area is cut up but after levelling it become quite suitable for irrigation because it is well drained. These features need to be observed carefully.

5.7. *Determination of areas unsuitable for irrigation.*—Areas unsuitable for irrigation should be demarcated as follows:—

(1) Areas where the rock is exposed or where the soilmantle is thin and consist mainly of gritty murum or pebbles and hence not likely to be quite fertile and is not fit atleast for heavy irrigation under perennials. It is often argued that this area improves in fertility by cultivation of cane but the important point is that this area requires large doses of water most of which infiltrates towards the low lying areas. If these lower areas are badly drained, water logging is the result.

(2) Areas which are heavily cut-up, or occupied by nalla beds etc., are unsuitable

(3) In forest unless deforestation and irrigation is envisaged, the areas should be demarcated as being out of the commanded area.

5.8. *Climatological data.*—Information on temperature, rainfall, humidity and open-pan evaporation should be obtained from IMD and incorporated in the report. The significance of the rainfall is evident. From temperature and evaporation it is possible to work out water requirements and formulate an approximate irrigation schedule by use of climatological methods.

These methods are briefly dealt with the paragraph 6.

5.9. *Laboratory work.*—As field tests are susceptible to errors arising out of lack of skill on the part of Surveyor and the subjective nature of the field methods, it is necessary to check the field-results on the basis of laboratory tests. For this purpose from every fourth auger hole on the alternate cross section in the grid and from every horizon in open profiles samples are taken for laboratory tests as indicated already in paragraph 5.6 B(i) for the following laboratory tests:—

1. Mechanical Analysis.
2. pH
3. Electrical conductivity.
4. Total soluble slats by gravimetric method.
5. Saturation moisture and field capacity.
6. Percentage shrinkage by evaporation of soil moisture for twenty-four hours by air drying and 24 hours oven drying.
7. Hydraulic conductivity.
8. Base exchange capacity, exchangeable cations, detailed analysis of water soluble salts.

5.9.1. *Mechanical Analysis.*—Mechanical Analysis is a test of considerable importance because it defines the soil-texture which governs many important soil-properties. Permeability, for instance, is closely related to the texture. When water is applied to the soil, a part is lost by percolation, some part is held by the soil and is available to the plants, and the remaining water, although held by the soil, is not available to the plant, because it is attached too tightly to the soil. A part of this unavailable moisture is lost by evaporation. These amounts of moisture are closely related to texture.

The fractions determined in the mechanical analysis and their size-ranges on the international standards are as given below :

Clay	..	..	..	Less than—0·002 mm.
Silt	..	..	..	0.002—·02 mm.
Fine sand	..	..	..	0.02 to—0·2 mm.

The various textural classes indicated in para 5.6 (*c*) are determined with the help of triangular chart (*see* Fig. 2).

5.9.2. pH and Electrical Conductivity represent the soil reaction and the salt status of the soil. Both these tests are generally made on soil-extract prepared by mixing and shaking for 100 g. of soil to 500 g. of distilled water, which gives the 1 : 5 soil water extract. With this ratio, if pH exceeds 9.0, soil is considered alkaline and unsuitable for crop growth for various reasons. As regards conductivity, if the value exceeds 3 millimhos/cm, the salinity is also unacceptable as more sensitive crops are not likely to thrive in this kind of soil.

These values are valied for 1.5 soil pastes. In scientific research and also in laboratory measurements, some authorities use saturation soil paste or 1 : 2 soil extract instead of 1 : 5 soil extract. Acceptable value of pH and EC have to be proportionate for the change in the soil-water ratio. It is also important to conduct these tests at 25° centigrade. As atmospheric temperature is not easily controlled to these level individual tests are conducted at different room temperatures and suitable corrections are applied.

As a check on electrical conductivity measurements, the total soluble salts are also estimated by gravimetric method i.e. by direct evaporation and weighing.

5.9.3. The saturation moisture and field capacity are parameters of a prime importance in fixing the irrigation schedule.

5.9.4. The shrinkage characteristics of the soil are related to the texture of the soil and are therefore conducted as a check on the correctness of mechanical analysis results. This check is qualitative but different fractions in mechanical analysis and the resulting textural clarification can be checked by determinating of shrinkage characteristic. Shrinkage is also related to the type of clay minerals and clay, minerals in turn determine moisture characteristic and many other important features of the soil.

5.9.5. *Hydraulic conductivity.*—Hydraulic conductivity in soil for permeability is obviously important in assessing irrigation requirements and the sub-soil drainage arrangements of the soil in question. It is important to obtain hydraulic conductivity of each soil horizon in a profile. In the upper layer, hydraulic conductivity is more because of the open texture, tilth, presence of manures etc. In lower horizon, soil is more or less compact and less penetrated by roots and is therefore likely to be impervious.

5.9.6. Base exchange capacity, exchangeable cations and analysis of water soluble salts are of importance. Their significance will be clear from the texts in the paragraph on the sub-soil drainage.

5.10. *Interpretation of soil survey data.*—The data obtained from the soil survey can be interpreted in various ways and the All India Soil and Land Use authorities (Ministry of Agriculture, Government of India) have laid down a system of class consisting of soils whose properties in regard to topography, subsoil drainage and physical behaviour are similar.

The system of interpretation adopted by the Irrigation Department has a direct bearing on the aspects of irrigation and sub-soil drainage. In arriving at this classification it is possible to fix soil classes for each kind of crop or a crop group but such classification may result in an impracticable localisation. From experience it has

been learnt that while such restrictions on seasonal crops are not necessary or even practicable, some control has to be kept on the percentage and the location of the perennial crops in the irrigated areas to avoid salinity and water-logging.

Therefore, the system of classification proposed here results in a graded restriction on the percentage of perennials. This aspect has been superposed on the standard land irrigability classification recommended by the Water Management Division of the Ministry of Food and Agriculture, Government of India. The land irrigability classes specified in this system are as follows :

Class 1—Lands that have few limitations for sustained use under irrigation.

Lands of this class are capable of producing sustained and relatively high yields of a wide range of climatically adapted crops at reasonable cost. There are few or no limitations of soil, topography or drainage. The soils in this class are nearly level, have very deep rooting zones, have favourable permeability, texture and available moisture and good tilth. Lands with unfavourable soil or topography are not included in this class, nor are lands where drainage or salinity problems are predicted after introduction of irrigation due to unfavourable water quality sub strata conditions or lack of outfalls.

Class 2—Lands that have moderate limitations for sustained use under irrigation.

Lands of this class have moderate limitations of either soil, topography, or drainage when used for irrigation. Limitations may include singly or in combination the effects of :

(1) very gentle slopes,

(2) less than ideal soil depth, texture, permeability or other properties,

(3) moderate salinity or alkali when in equilibrium with the irrigation water,

(4) Somewhat unfavourable topography or drainage conditions.

Class 3—Lands that have severe limitations for sustained use under irrigation.

Lands of this class have severe limitations of either soil, topography or drainage when used for irrigation Limitations may include singly or in combination the effects of :

(1) gentle slopes,

(2) unfavourable soil depth, texture permeability or other soil properties,

(3) moderately severe salinity or alkali when in equilibrium with the irrigation water,

(4) very unfavourable topography or drainage condition.

Class 4A—Lands that are temporarily classed as not suitable for sustained use under irrigation pending further investigations.

Lands of this class cannot be classified at the present level of investigations, and are temporarily classed as not suitable for irrigation. If these lands are to be given a final classification special investigations will be needed.

Class 4B—Lands not suitable for sustained use under irrigation.

The lands of this class do not meet the minimum requirements for lands of other classes, or are not susceptible to delivery of irrigation water.

In the above class, the following percentages of perennials can be specified at the project preparation stage:—

Class 1	Perennials 12 to 15 percent.
Class 2	Perennials 9 to 12 percent.
Class 3	Perennials 6 to 9 percent.
Class 4 A	Perennels 3 to 6 percent.
Class 4B	Perennials 0 to 3 percent.
Other classes	Nil.

These limits are based on the Government Resolution, No. MIC/6062-I (4), dated 5th April 1968.

At present broad irrigability classification is given at the project preparation stage. At that stage when an area is to be actually brought under irrigation and blocks in the various survey numbers are to be sanctioned, the restriction on perennials is implemented by fixing X limits for various outlets. These X limits are described in paragraph 6 below. By adopting them the total acreage of perennials under each irrigation outlet can be specified but in addition it is necessary to locate these perennials in the area which is best suited to them. At present, this aspect is left to the judgement and discretion of the irrigation officers. The question of fixing irrigability classes outletwise for implementation at the irrigation management stage is under study.

5.11. *Soil Survey Report*

5.11.1. *Presentation of Report.*—The information which normally be presented in the pre-irrigation soil survey report has been enumerated below:—

(1) Climatological data i.e. Rainfall and maximum and minimum temperature evaporation, humidity, wind velocity etc.

(2) Existing major crops and their acreages in the command.

(3) Number of wells, crops and areas irrigated on them.

(4) The characteristics recorded villagewise are : Name of the village, total area surveyed, distribution of soil in shallow, medium and deep soil, total number of profiles tested, number of saline and alkaline profiles in medium and deep soil zones, number of wells observed, number of wells with water level from 0-1·25 metres, 1.25 to 3 metres. Number of water samples collected and tested. Number of wells with water samples having EC more than 1000 micromhos/cm.

(5) Depthwise salinity and alkalinity of profiles.

(6) Textural classification in medium and deep soil.

(7) Features of existing natural drainage namely the slopes in different reaches, outcrops of rock etc.

(8) Results of river water samples collected in different seasons.

5.11.2. The Soil Survey report should not be a mere list of data tables. Following important features should be attended to :—

(*a*) Significance of the various tests should be indicated briefly to inform the user of the report on their purpose.

(*b*) On this background the conclusions emerging from the data should be briefly stated.

(*c*) Attention should be specifically invited to the areas that are unsafe for perennial irrigation, and would need prompt remedial measures to set right the expected salinity and water-logging etc.

(*d*) Infrastructural aspects should receive attention in the report, and their bearing on the proposed crop-pattern should be discussed.

(*e*) Climatic features need some comments to bring out important features such as dry spells even in regular monsoon, very low temperatures in winter, possibility of the crop getting caught in the rain when the earheads bear grain, etc. This analysis cannot be complete, but the features which are conspicuous from the data must be mentioned at least generally to examine their bearing with the cropping pattern.

6. Fixation of 'X' limits

'X' limit is the upper limit of or the maximum permissible cane acreage in a command area of an irrigation outlet. It is fixed in order to restrict soil-deterioration in that area resulting from continuous, heavy irrigation of a crop like sugarcane.

This limit does not decide where cane can be grown or allowed without damage to land, but restricts cane to areas which, if affected, can be conveniently drained.

'X' limits are fixed or revised every 6 years by the Irrigation Research Divisions on the basis of data collected from soil survey and management divisions as detailed below. From these data the percentage of the area suitable for perennial irrigation of the total area is first worked out taking into consideration all the limiting factors of perennial irrigation. These percentage figures are converted into the actual 'X' limits according to a scale laid down by Government from time to time. Different scales are used for medium or deep soils as also for drained and undrained sub-catchments, i.e. according to the provisions for natural and artificial drainage of the subsoil.

The data required for fixation of 'X' limits are—

(1) A index plan of the scale 1"-660' showing,

(*a*) alignment of main canal, branches, distributaries, water-courses, minors, sub-minors, outlets, aqueducts, culverts, bridges, syphones etc. with clear boundaries.

(*b*) uncommanded area.

(*c*) medium and deep soil areas with 40 cm. and 250 cm. MIBs.

(*d*) exposed patches of rock, murum, cut-up lands.

(*e*) impermeable zones having high salinity/alkalinity.

(*f*) 4 km. limit of village boundaries.

(*g*) 1·5 m. (5' feet) contours.

(*h*) HIBs. at 1' (30 cm.), 4' (125 cm.) and 10' (3·0 m.) depth.

(*i*) location of wells and water-quality data.

This information is tabulated for each survey number under command and added up for one outlet for which an 'X' limit is then calculated.

Once worked out these limits hold for a period of 6 years, at the time of revision, changes in the extent of alkalinity, high water table (30 cm. HIB) are determined, depending on which the X limit can either be decreased if the affected area is increasing or increased if the affected area is decreasing.

It will thus be seen that the fixation of 'X' limits is mainly an interpretation of the soil and hydrological data in terms of the perennially irrigated sugercane crop. Demarcation of saline, alkaline, and water logged areas is very important at the time of revision of these limits. A continuous check on the spread of salinity and water-logging is maintained by the Irrigation Research Division concerned by visual estimation of salinity during May and well water observations during November-December every year. A compilation of these data is used at the time of revision of 'X' limits.

Visual observations of salinity, water logging etc. are made by Sectional Officers and Sub-Divisional Officers at the time of revision of the blocks and communicated to the Executive Engineer for any preventive action such as regulation of the block sanctions as provided in section 57 of the Maharashtra Irrigation Act, 1976.

At present, these checks are entirely subjective and are not backed any laboratory testing. Improvement of this system is under study.

7. Control over salinity, alkalinity and water-logging

If the subsoil drainage of a particular sub-catchment is not efficient, problems of water-logging and salinity are likely to occur as explained in para 2.

The command of an irrigation project is divided into sub catchments as already explained in paragraph No. 5.5 (*B*). These sub-catchments are bounded on one side by the canal, on two sides by distributories and on the lower side by the river. The distributories are normally in ridge and between these two ridges there is a depression through which the nalla runs. These sub catchments form independent units of subsoil drainage.

The action to keep the salinity, alkalinity and water-logging in the command area under proper check consist in taking the following steps :—

(1) To keep a continuous watch on the extent and intensity of salinity, alkalinity and water logging.

(2) To formulate and implement the schemes of subsoil drainage and reclamation of affected soils and

(3) To conduct researches and continuously improve the techniques of demarcation of affected soils and their reclamation.

In regard to salinity and alkalinity a comment on electrical conductivity (EC) and pH seems to be necessary.

It is well known that water without any traces of salt offers a fairly high resistance to the flow of electricity through it. By mixing the salts in it the resistance to the flow of an electrical current through water diminishes rapidly or in other words its electrical conductivity (EC) increases. The EC of a saline soil is fairly easy to measure and is therefore used as a norm for measuring the salt concentration and classification into various categories dependent on the intensity of salinity. The classification system is shown in the table under sub-para (*c*) of paragraph 7.1 below.

The measure of alkalinity is the pH value of the soil. The pH value of a neutral substance is 7. If the pH is less than 7, the substance is acidic and if it is more, it is alkaline, Soils in Maharashtra are mostly alkaline, acidic soils are rearely encountered except in heavily drained areas in Konkan. Plants can tolerate alkalinity till the pH reaches the value of 9·0. Beyond this alkalinity causes rapid deterioration in the crop yield. Therefore soils with pH value greater then 9·0 are called alkaline soils.

The first step to check water logging and salinity is annual demarcation of areas so affected. The procedure is as follows:

7.1. *Annual demarcation of affected areas.*—Each sub-catchment of an irrigated project is surveyed every year to demarcate the areas affected by water-logging and salinity. The affected area is recorded survey numberwise and the degree to which the soil is affected is indicated by adopting the following systems of classification:—

(*a*) Unaffected area is a portion in which the ground water is more than 1 metre below the ground level and the crops show normal growth. No salt patches are seen on the surface. Electrical conductivity (EC) as measured in para (*b*) is less than 1·5 millimhos, and pH less than 9·0 for 1:5 soil water extract.

(*b*) In the " slightly salt affected area " there are thin salt patches occurring on the surface and at places semi tolerant crops like the food crops show a somewhat stunted growth. So far the slightly affected area and in fact the other classes of affected area were demarcated on the basis of visual inspection. The procedure based on conductivity test is now being introduced and according to this system the slightly saline areas would be those in which the value of EC is 1·5 millimhos per cm. measured at 25°C at 1:5 soil paste. If the tests were to be carried out on a saturation extract the conductivity would be 4 millimhos per centimetre for the same soluble salt concentration.

(*c*) The " Salt affected area " shows more conspicuous salt patches and greater reduction in the yield. Not only food crops but sugarcane which is more salt resistant also gets affected. At 1:5 soil water paste electrical conductivity would be 3 millimhos per cm or more at 25°/C

On saturation extract it would be about 8 millimhos/cm or more.

The results can be summarised in a table as follows:—

TABLE 1

General Classification of Saline Lands

Class	Electrical conductivity (mho/cm) Soil-water ratio			pH		Symbol
		1:5	1:1	1:5	1:1	
(1) Unaffected ..	Less than ..	1.5	....	9.0	8.5	UA
(2) Slightly Salt-affected		1.5	4.0	9.0	8.5	SSA
(3) Salt-affected ..		3	8	9.0	8.5	SA

(*d*) The high ground water area is defined as the portion which is not actually water logged but in which the water table is one metre or less below the ground level. In the high water table area the lower part of the root zone is rather heavily charged with water due to capillary rise and is unsuitable for proper growth of crops. The high ground water is also a precurser to water logging.

(*e*) The water-logged area is defined as that portion in which the water surface is either at ground level or above. This area is swampy, does not support any crop and is often full of weeds like bulrushes (" Pan Kanis " in Marathi).

7.2. *Preparation of Subsoil Drainage Schemes.*—The data obtained from the survey of the affected areas is examined for each project as a whole and for each sub-catchment. Certain sub-catchments show a conspicuous increase in the extent of affected area. In these sub catchments it becomes necessary to improve the natural drainage and the drainage scheme is therefore necessary. Basically this drainage scheme consists in giving proper gradient to the existing nallas. The pervious stratum which is the main sub-soil drainage medium is buried under the impervious over burden and does not have an effective outfall. Therefore by cutting through the impervious over burden the under lying pervious stratum is to be exposed, and the water flowing through it is to be collected and discharged through the channel into the main river or some such natural drain which will carry it away. In Maharashtra the main drains have good slopes and normally the nalla joins these main drains with a drop. Absence of an outfall is a rare situation. To prepare a drainage scheme on the above lines, a detailed survey involving the following features is necessary :—

(*i*) 'L' section of the nalla showing rock barriers.

(*ii*) The nalla bed level is taken at every 30 metres and auger pits to know the stratiagraphy is taken at every 60 metres.

(*iii*) Cross section of the nalla is taken at every 200 metres, upto the boundary of the damaged area.

(*iv*) At these cross sections levels at every 300 metres intervals and auger pits at every 60 metres intervals are taken.

Based on these details, plans and estimates of a drainage scheme are prepared.

7.3. *Construction of Drainage Schemes.*—The construction of a drainage trench is a slow process. It has to start from the out fall. As the nalla is depened, the stagnant water from surface and subsoil moves down stream and the land begins to dry up. Work can be taken up only in this dried up portion and therefore a limited number of labourers can be engaged. The work is hard and unhealthy and only certain specially trained communities come forward to do this work. Land acquisition is a big problem.

The open trench drainage has the disadvantages that it involves permanent acquisition of a cultivable lands in the project commands. In spite of losses due to water logging and salinity there is a resistance on the part of cultivators to part with their lands. This difficulty can be overcome by using buried conduit drainage system. In such a drainage system the sub-soil flow which comes from the pervious substratum is collected into the open jointed pipe of a perforated or slotted pipe covered suitable by a well-graded pervious medium of sand, gravel and rubble. Water then goes through these open-joined pipes towards the outfall.

The main problem in the buried conduit system is the clogging of these pipes. One might expect that a well designed filter of sand, gravel and rubble around the pipe may prevent clogging. The main problem, however, seems to be different and is related to the construction. When the trench is excavated in a water-logged area its sides are rather unstable on account of the continuous effux of sub-soil water. It is not possible to permit very flat slopes becauses this would increase the cost and the land acquisition difficulties, which are already very hard to surmount, may increase further.

When the pipes are laid into such an unstable trench, there is very likelihood of the open joints getting clogged by debris which comes in large quantities and is very difficult to remove. In fact the whole work is so untidy that it becomes impossible to enforce the tight specification of proper joint spacing and careful deposition of a scientifically graded sand filter. The close conduit drainage scheme has therefore met with only limited success in the field but it is an alternative which certainly deserves further trials. A workable alternative is to leave open trenches to say for about a year or so. After the ground water level is lowered the trench is reasonably dry and stable the pipes can be laid.

One more problem associated with buried conduit drainage is the high cost of concrete pipes. A cheaper substitute needs to be found and tried.

7.4. *Reclamation of water-logged, saline and/or alkaline lands.*—Successful drainage schemes usually reclaim water-logged and saline soils by the removal of excess water and soluble salts through the drainage waters.

Alkaline-alkali soils are not reclaimed by drainage alone as their chemical composition needs alternation without which they continue to remain impermeable and ill-drained because of extremely slow permeability.

Chemical methods of reclamation like use of lime (C. cg), 97 Psum (G. Soa), sulphur (S) etc., and, raising of tolerant crops like paddy, are necessary for reduction of the alkalinity i.e. high pH. This reclamatic process may take 3-5 years for bringing the affected soils to normal condition.

References :

1. Soil Survey Manual, All India Soil and Land Use Survey Organisation I.A.R.I., New Delhi.

2. Land Classification Handbook, United States Department of Interior, Bureau of Reclamation.

3. Irrigation of Agricultural Lands Agronomy, Vol. II—R. M. Nagan, H. R. Haise, T. W. Edminister.

4. Irrigated Soils—Thorne and Peterson.

5. Soil Chemical Analysis—M. L. Jackson.

6. Diagnosis and Improvement of Saline and Alkaline Soils—Agricultural Handbook No. 60, United States Department of Agriculture.

7. Manual of Pre-irrigation Soil Survey, Vols. I and II, Central Water and Power Commission, New Delhi.

8. Laboratory Manual for Soil Chemistry—A. Sankuran.

9. Technical Paper 58—P. W. D., Bombay.

10. Soils their Chemistry and Fertility in Tropical Asia—Temhane, Motiramani, Bali Donahue.

11. Handbook on Irrigation Water Management Section X-Soil Survey and Land Classification—Water Management Division, Ministry of Food, Agriculture, C. D. and Co-operation, Government of India, New Delhi.

12. Fundamental Soil Science—C. Z. Millar, L. M. Turk, H. D. Foth.

13. Soil Physics—Baver.

14. The Economics of Irrigation—Colin Clark.

BOMBAY : PRINTED AT THE GOVERNMENT CENTRAL PRESS

पाडेवारे [illegible] आणि [illegible]पती [illegible] मंडळ
मुंबई १